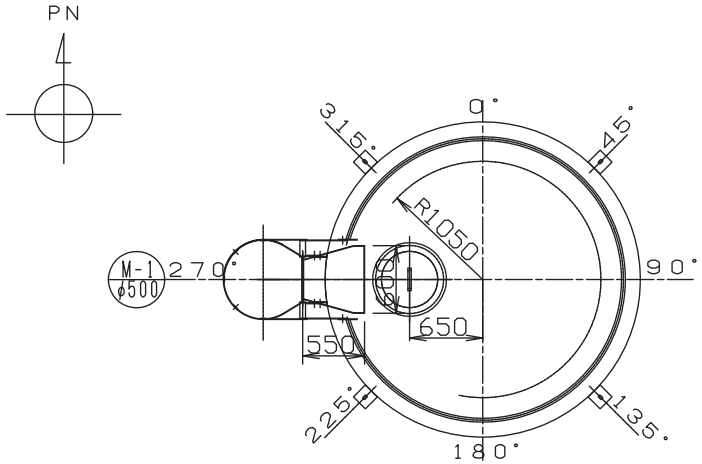

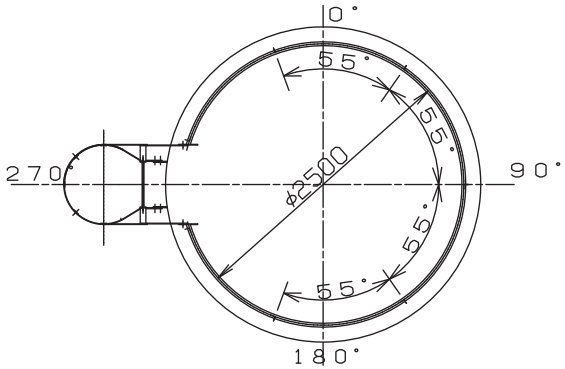

No.	DATE	MARK	REVISION	DES' DBY

NOZZLES

No.	NAME	SIZE	TYPE	NOTE
N-1				
N-2				
N-3				
N-4				
N-5				
N-6				
N-7				
N-8				
N-9				
N-10				
M-1	MAN WAY	φ500	——	

SPECIFICATION	
NAME	
SIZE	φ2800 × H3300
CAPACITY	20 m³
MATERIAL	FRP

DESIGN CONDITION	
CHEMICAL	
DENSITY	
SPECIFIC GRAVITY	
DESIGN TEMP.	
DESIGN PRESS.	

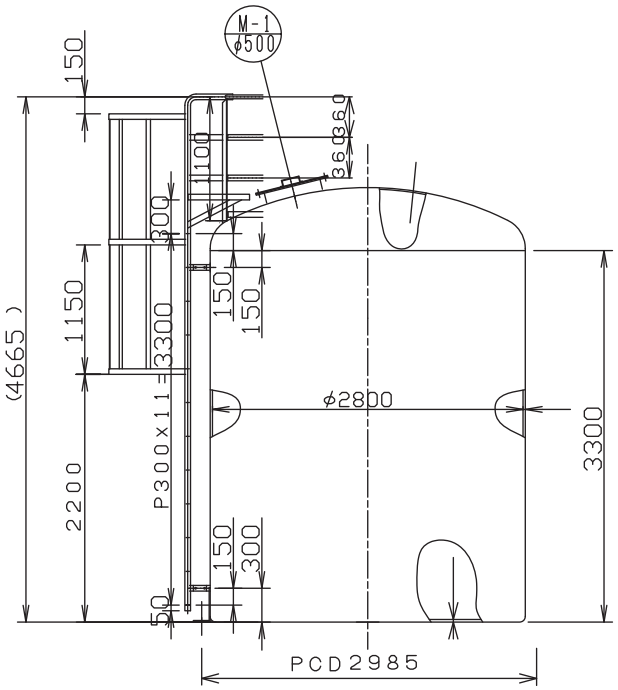

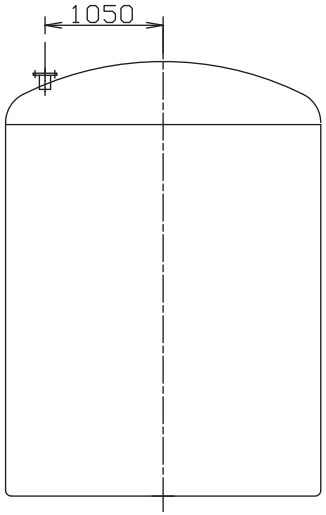

NOTE

1. NOZZLE PROJECTION WITHOUTSHOWING MEASURE TANK ALL 100mm
2. B.N.W. SUS304
3. GASKET:E.P.T
4. VESSEL INSIDE:DISPOSE OF NO OIL

FOR			
CUSTOMER			
TITLE 20m³ of a standard			
DATE	SCALE	CHECKED BY	DRAWN BY
	1/50		
DWG. NO.	NO. REQD		
CBSTE20	1		

CHUO BOSHOKU KOGYO CO.,LTD